Sensors & Transducers, Vol. 157, Issue 10, October 2013, pp. 26-30

Sensors & Transducers

http://www.sensorsportal.com

Design on Electrocardiosignal Detection Sensor

Hao ZHANG
School of Mathematics and Computer Science, Tongling University,
244061, China
E-mail: ahzhanghao@yeah.net

Received: 18 August 2013 /Accepted: 18 September 2013 /Published: 31 October 2013

Abstract: The key of using a sensor to detect electrocardiosignal (ECG) is on extracting a weak signal from strong noise background and performing the high-gain amplification. The ECG characteristics and circuit model were analyzed in this study. The design included the detection sensor of four parts-preamplifier, high-pass and low-pass filter circuits, 50 Hz notch filter and main amplifier, and the sensor has a high common-mode rejection ratio (CMRR) and uses a special chip UAF42 to filter power frequency interference. It has been successfully applied to the ECG monitoring system to achieve good results. *Copyright © 2013 IFSA.*

Keywords: ECG, Driving circuit of right leg, Filter.

1. Introduction

Tissues and body fluids around heart can conduct electricity. The sum of action potential changes of numerous myocardial cells can be conducted and reflected to the body surface, and the bioelectrical signal generated by myocardial activation during this heart activity is ECG. A large number of domestic and foreign experimental data and literatures suggest that the ECG amplitude of healthy human is about 10~4000 μV, and the frequency is 0.05~100 Hz. The 90 % of spectrum energy is concentrated on 0.25~35 Hz [1]. ECG amplitude is small, and the signal to noise ratio (SNR) is low; it is vulnerable to electromagnetic radiation interference in the surrounding environment and internal electronic noise interference of instrumentation, so how to extract the ECG from strong noise background and perform high-gain amplification is a difficult problem to be solved. A sensor with a high CMRR was designed in this study, and the detection and acquisition of ECG are effectively achieved.

2. ECG Signal Characteristics and Circuit Model

The measuring position on the "skin surface" determines that the ECG has the following characteristics when a disposable ECG electrode with JK-1 type of electrode model was used for an acquisition:

Metal electrode is in contact with the electrolyte of skin, and a potential difference will be produced between electrode and skin. It can be overcome by the common-mode rejection characteristic of preamplifier if the polarization potentials of two electrodes are equal. Otherwise, the direct-current (DC) differential-mode signal is formed and enters the preamplifier, resulting in a deviation of static work point, or even making the amplifier enter saturation.

ECG resistance includes contact impedance between electrode and skin and the body resistance of human soft tissue. The specific contact impedance value is in connection with body parts, contact

tightness, skin cleanliness, humidity, seasonal changes and many other factors.

The 50 Hz power frequency interference and induced potential existing in the body surface and space are necessarily reflected to the preamplifier through electrode to form interference on ECG.

In summary, the ECG source can be simplified to the equivalent circuit, as shown in Fig. 1.

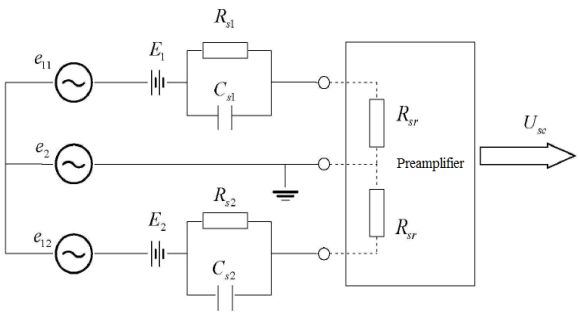

Fig. 1. Simplified equivalent circuit of ECG source.

Where e11, e12: ECG potential to be tested; Rs, Cs: contact impedance; e2: 50 Hz power frequency signal; R_{sr}: input impedance; E_1, E_2: polarization potential of electrode; U_{sc}: output voltage.

The use of a high CMRR of differential amplifier to inhibit power frequency interference is reasonable because 50 Hz common-mode signal is much stronger than the potential of ECG. The common mode rejection ratio is represented by CMRR if the differential-mode amplification of preamplifier is K in ideal conditions without considering the internal resistance of the signal source. The output Usc can be represented by Formula (1).

$$U_{sc} = K\left(e_{11} - e_{12}\right) + \frac{K}{CMRR} e_2 \quad (1)$$

Formula (1) indicates that the SNR can be increased by improving the CMRR. SNR|min=5 when CMRR = 100 dB if the minimum usable signal is selected to be 50 μV, which is acceptable.

The situation is more complicated with the source resistance being considered. The equivalent circuit with common mode input was further simplified for ease of discussion, as shown in Fig. 2.

The contact resistance $R_{s1} \neq R_{s2}$ can generate differential mode between potentials u1 and u2 of two input ends if the earth input impedances of two input ends are Rsr1 and Rsr2 in differential circuit, and Rsr1 = R_{sr2} = R_{sr} is set.

$$u_1 - u_2 = e_2 \frac{R_{s1} - R_{s2}}{R_{sr}} \left(设 R_{sr} \geq R_{s1}, R_{s2}\right) \quad (2)$$

Supposing.

$R_{sr} = 10M\Omega, R_{s1} - R_{s2} = 1K\Omega, e_2 = 1V$

$u_1 - u_2 = e_2 / 10000 = 100\mu V$ can be derived from equation (2), which is a digital having the same magnitude as the measured signal. It is impossible to improve the SNR to 1 no matter how high the CMRR of differential amplifier may be at this time. It is essential to improve the contact between electrode and skin to make $R_{s1} - R_{s2}$ as small as possible and meanwhile increase the input impedance of the amplifier in order to reduce the differential mode $u_1 - u_2$ generated by the common mode signals at the input end of prestage.

The above analysis shows that ECG detection sensor should have the following basic properties: $CMRR \geq 100\,dB$ and input impedance $R_{sr} \geq 100M\Omega$ and needs a 50 Hz narrow band-stop filter, which should have small whole circuit noise and be suitable for miniaturization and integration. Here a practical ECG detection sensor was designed on the basis of the above analysis.

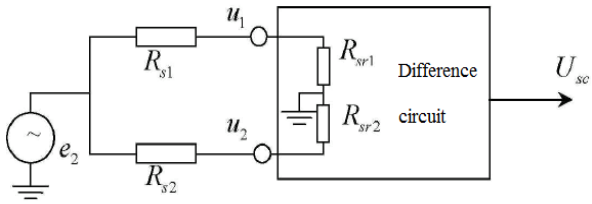

Fig. 2. A simplified equivalent circuit with only common-mode input being considered.

3. Design on Acquisition Circuit

Firstly, the high fidelity amplification of weak ECG signal was performed through anti-high frequency interference and preamplifier section after the ECG was acquired by electrodes. The gain of the preamplifier circuit cannot be designed to be too large since DC signal a few times bigger than useful ECG exists at the input end. Then, it was amplified by the main amplifier for the second time after the interference was filtered through low-pass filter, high pass filter and 50 Hz trap wave. Finally, the A/D conversion of ECG was performed [2].

3.1. Anti-High Frequency Interference and Preamplifier Circuit

The frequency range of effective ECG is 0.05~100 Hz. ECG is added to the front of the amp from the body via electrodes, and an anti-high-frequency circuit was specially designed in order to ensure the proper display of ECG. The capacitors C1 and C2 are anti-high-frequency interference capacitors in Fig. 3. The capacitive reactance of the capacitor C is as following when the center frequency of ECG is 10 Hz:

$$X_c = \frac{1}{2\pi fC} = \frac{1}{2\pi \times 10 \times 220 \times 10^{-6}} = 72 M\Omega \quad (3)$$

It has greater input impedance than the monitor, so the circuit is equivalent to an open circuit. X_c is only 720 Ω which is much lower than the input impedance of the monitor when the frequency is high (such as 1 MHz), so the circuit is equivalent to the short circuit of high-frequency interference signals to ground. R1 and C1, R2 and C2 constitute passive low-pass filters, respectively, whose cutoff frequencies are:

$$f_H = \frac{1}{2\pi RC} = \frac{1}{2\pi \times 10 \times 22 \times 10^3 \times 220 \times 10^{-6}} = 33\, kHz \quad (4)$$

The ECG entered the preamplifier after the high-frequency interference above 33 kHz was filtered. ECG belongs to differential mode signal, so instrumentation amplifier was used as a preamplifier, which has many characteristics: high input impedance (generally up to above 10^9 Ω), low bias current, high CMRR and single-ended output. This design selected a low-power, high-precision and low noise instrumentation amplifier AD620.

The maximum of input imbalance 50 mV,
Input imbalance drift 0.6 mV/°C,
CMRR 120 dB (G=10).
The calculation formula of gain is:

$$G = \frac{49.4 k\Omega}{R_G} + 1 \quad (5)$$

where R_G is the resistance between pin 1 and pin 8, and G is the gain value. The gain value should be large enough in order to avoid interference from other signals since ECG signal is weak, however, on the other hand, saturation may appear on the first stage if the gain is too large, and so the appropriate value of RG should be selected to obtain the proper gain. The testing shows that R_G should be set as 8.25 kOm in the design, and G=7 is obtained through the calculation according to the formula (4). A common-mode feedback circuit was constituted by the AD705J, C5, R4, R5, R6 and R7 in order to further improve the CMRR. The common mode noise that is entered by the body and mixed in the original ECG was detected by two equal-value resistances: R3 and R5. Its first level phase reversal was amplified by AD705J, and then it returned to the right leg and was superimposed on the common mode voltage of body, thus reducing the absolute value of human common mode interference and improving SNR. Such a system is conventionally called the "driving system of right foot". AD620 is used in the previa differential circuit so that the amplifier has many characteristics: high input impedance, high CMRR and low noise, thus realizing the ECG differential amplification and effectively inhibiting the interference of 50 Hz common mode signal [3].

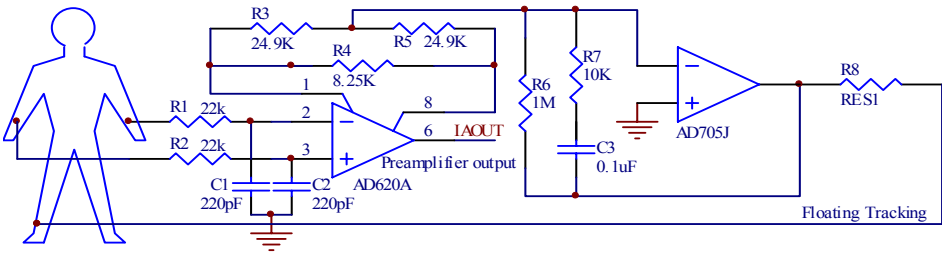

Fig. 3. Anti-high frequency interference and preamplifier circuit.

3.2. High Pass Filter and Low-Pass Filter

Amplifier temperature drift, changes in skin resistance, breathing and body muscle contraction can cause a "baseline drift" phenomenon of ECG, which means that the output ECG slowly moves up and down some horizontal line. These effects can be attributed to the low-frequency noise interference from the perspective of spectrum. High-pass filter can remove this effect. $C_4, C_5, R_9, R_{10}, U_1$ constitute a second-order active high-pass filter, as shown in the left half of Fig. 4. Butterworth filter was selected in order to make the value of element simple and response characteristic flat; cutoff frequency is designed to be $f_{hp} = 0.05\ Hz$, and $C_4 = C_5 = 2\ \mu F$ and $R_9 = 2R_{10}$ are taken in order to minimize the loss of ECG low-frequency compositions and meanwhile effectively filter the interference of low frequency compositions. $R_9 = 2.251\, M\Omega$ and $R_{10} = 1.1254\, M\Omega$ can be calculated by the formula $f_{hp} = \frac{1}{2\pi\sqrt{C_4 C_5 R_9 R_{10}}}$, which can approximatively adopt $R_9 = 2.26\, M\Omega$ and $R_{10} = 1.13\, M\Omega$.

A fourth-order Butterworth low-pass filter (right half of Fig. 4) was used in order to eliminate the high-frequency interference signals of more than 100 HZ. Component value calculations are shown in [4].

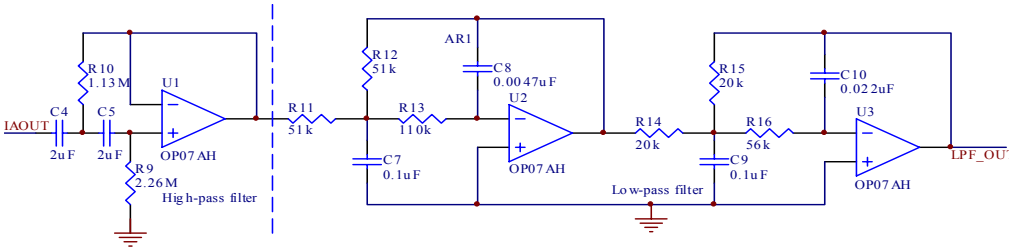

Fig. 4. High pass and low pass filters.

The simulation analyses of amplitude-frequency characteristics of high-pass and low-pass filters were performed in MULTISI M10 software, and Fig. 5 shows the amplitude-frequency characteristics of high-pass and low-pass filters. The amplitude attenuation is -3.117 dB at 49.198 mHz and -3.021 dB at 98.418 Hz. Fig. 5 shows that out-band attenuation is relatively rapid (-80 dB/10 octave) because a fourth-order Butterworth low-pass filter was used. The signals sent by the electrocardio electrodes were limited to 0.05~100 Hz after the high-pass filtering and low-pass filtering.

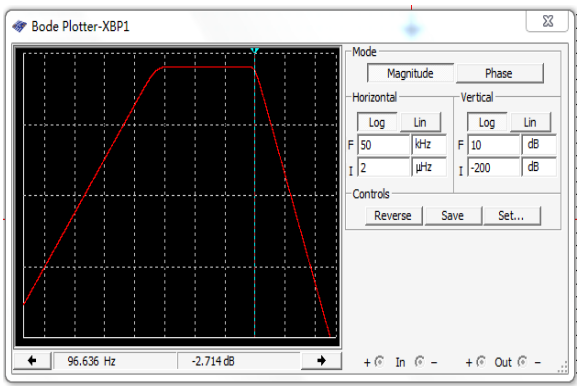

Fig. 5. Amplitude-frequency characteristics of filter.

3.3. 50 Hz Notch Filter

The preamplifier circuit has a strong inhibitory effect on common mode interference, but some power frequency interference enters a circuit in a differential mode signal way, and the frequency is within the frequency band of ECG. The output remains to have strong power frequency interference after the front preamplifier, high-pass filter and low-pass filter because of the electrode and input loop instability and other factors besides these, so it must be specially filtered out. The double-T trap circuit is often used against 50 Hz frequency interference. Such a circuit requires a high symmetry, and the precision demanding of components is strict, or the notch frequency and quality factor (Q value) are directly affected, so this brings difficulty to production process or device screening, and it is quite difficult to adjust. The UAF42 Universal Active Filter of BB (Burr-Brown) company has overcome this drawback, and it can be widely used in high-pass, low-pass and band-pass filter designs. A typical analog architecture of state variable is used, and an inverting amplifier and two integrators are integrated inside. The integrators include 1000 pF (±0.5 %) capacitance and thus solve a problem of getting low loss capacitor in the active filter design well. Meanwhile, a dedicated CAD software FILTER42 is used for the design, and the software can calculate the corresponding element values as long as the parameter is input into FILTER42 according to the requirements of designed circuit, very convenient, and has advantages of a high-precision frequency and high Q values. The designed filter circuit is shown in Fig. 6, and Fig. 7 shows response curves obtained by a simulation software Tina-TI.

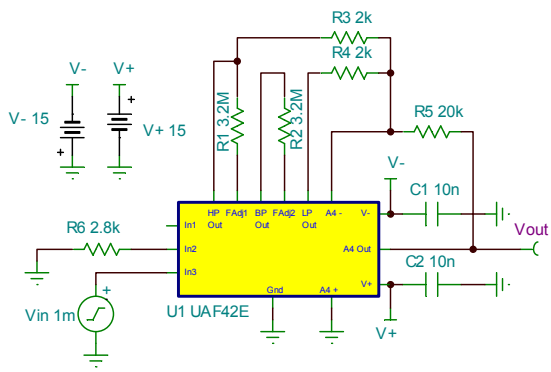

Fig. 6. 50 Hz notch filter.

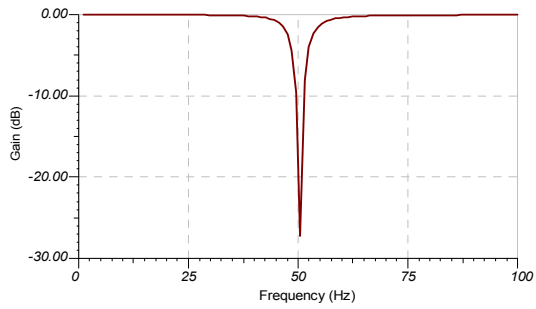

Fig. 7. The amplitude-frequency response curve of 50 Hz notch filter (Q=10).

Trap wave point is f_{NOTCH}=50 Hz, and the frequency value may be changed by R1 and R2 values. Quality factor (Q value) is determined by R6, and their relationship is:

$$R_6 = \frac{25k}{Q-1} \quad (6)$$

The Q value should be 10 if R_6=2.8 k is set. Q-value must be consistent with the ratios of R_5 / R_3 or R_5 / R_4. Thereby, the ratio of feedback resistance R5 to input resistance R3 or R4 is also 10. The stopband bandwidth meets $BW_{-3dB}=f_{NOTCH}/Q=5$ Hz.

The high Q is corresponding to a narrower stopband for the notch filter, and low Q is corresponding to a wider stopband. Stopband bandwidth and attenuation multiple is contradictory: if bandwidth is small, then attenuation is small, or if bandwidth is big, then attenuation is big. It is essential to find a balance between stopband bandwidth and attenuation multiple when ECG is processed. The stopband bandwidth is 5 Hz in Fig. 7, and the gain is about -28 dB to ensure the integrity of the ECG and meanwhile effectively filter out the 50 Hz power frequency interference.

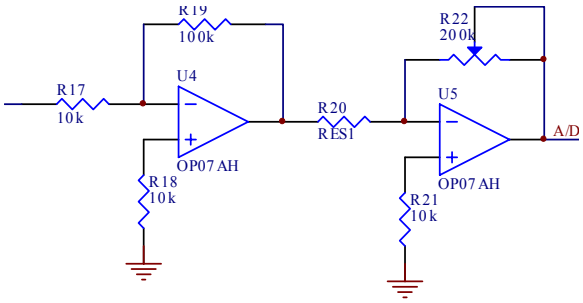

Fig. 8. The main amplifier.

Fig. 9. Electrocardiogram.

3.4. The Main Amplifier

ECG amplitude is about 10~4000 μV which needs to be amplified for 1000 times to a volt level before entering the A/D. Preamplifier magnification is 7 times, and finally it just needs to be amplified for 143 times through the main amplifier. Post amplification circuit is the two-stage reversed-phase amplifier, as shown in Fig. 8. The first stage of amplifier gain is $-\frac{R_{19}}{R_{17}} = -10$, and the second stage of amplifier gain is $-\frac{R_{22}}{R_{20}}$. R_{22} is the adjustable resistance of 200 kΩ which can be used to adjust the overall gain size of post amplification circuit to suit the requirements of different subsequent circuits.

4. The Applications on ECG Detection Sensor

The testing shows the performance indicators of ECG detection sensor as follows:

CMRR: 108 dB;

Pass band: 0.05~100 Hz;

Input impedance: greater than 100 MΩ;

Differential mode voltage gai: 1000 times;

The efficiency attenuation of power frequency filter: about 30 dB.

Fig. 9 shows a section of electrocardiogram obtained after the sensor was applied to some portable ECG monitor. The ECG is clear and stable, so the sensor is fully able to meet ECG monitoring requirements. The desired results are also got.

5. Conclusions

ECG is a complex physiological signal, and there exist many factors to affect the accuracy and reliability of measurement in ECG measurement. ECG detection sensor was designed on the basis of the characteristics of ECG, which can effectively inhibit common mode signal, amplify weak ECG and has an ideal CMRR. The 50 Hz notch filter designed using special UAF42 filter chip especially has the advantages of a high precision frequency, narrow bandwidth and high attenuation and solves a difficult problem: obtaining the capacitor with a stringent tolerance, low loss and high degree of matching in the design of filter.

References

[1]. Rarnon Pallas-Areny, Interference rejection characteristics of Biopotential amplifiers, a comparative analysis, *IEEE Transaction on Biomedical Engineering*, Vol. 35, Issue 11, 1998, pp. 120-124.

[2]. Zhang Wei, Zhang Shi, Bao Xirong, et al., Design of preamplifier and anti-interference for the portable ECG monitor, *Information of Medical Equipment*, Vol. 20, Issue 10, 2005, pp. 7-9, 34.

[3]. Huang Jinwen, Research the effect of grounding in medical signal acquiring, *Journal of Yunnan University (Natural Sciences Edition)*, Vol. 29, Issue S1, 2007, pp. 119-123.

[4]. The precise design of active power filter, *Publishing House of Electronic Industry*, Beijing, 1984.